LOGIQ™
AIR SUSPENSION SOLUTIONS

Installation Instructions *Rev.05*

AIR SPRING KIT

88-23110 FORD F-250/F-350 (2011-16)

TO INSTALL THIS KIT YOU MUST HAVE AT LEAST 2.40IN OF CLEARANCE BETWEEN THE TIRE SIDEWALL AND THE LEAF SPRING

WARNING! – READ BEFORE USE

READ INSTRUCTIONS THOROUGHLY AND COMPLETELY BEFORE INSTALLATION.

INSTALLATION BY A CERTIFIED PROFESSIONAL MECHANIC IS HIGHLY RECOMMENDED.

LOGIQ™ IS NOT RESPONSIBLE FOR ANY DAMAGE OR FAILURE RESULTING FROM IMPROPER INSTALLATION.

5 PSI MINIMUM — 5 PSI MINIMUM AIR SPRING OPERATING PRESSURE

150 PSI MAX AIR SPRING PRESSURE

GVWR — NEVER EXCEED MANUFACTURER'S MAXIMUM PAYLOAD OR GVWR

PROP 65 — CALIFORNIA RESIDENTS - PROP 65

WARNING: This product can expose you to chemicals including Di(2-ethylhexyl) phthalate (DEHP), which is known to the State of California to cause cancer, and birth defects or other reproductive harm. For more information go to: www.P65Warnings.ca.gov/product.

WARRANTY

LOGIQ™ provides a limited lifetime warranty to the original purchaser of products, that the product be free from defects in workmanship and materials when used on cars and trucks as specified by LOGIQ™ and under normal operating conditions. This warranty is subject to the requirements and exclusions set forth in the full Limited Warranty and Return Policy that is available at logiqair.com/warranty. Air compressors are a wearing component and are covered by a 2-year warranty from the date of purchase. The warranty does not provide coverage for abuse, operation in a manner not consistent with the product's design, or damage resulting from exposure to the elements.

⚠ WARNING & DISCLAIMERS

By installing this product you acknowledge that the suspension of this vehicle has been modified. As a result, this vehicle may handle differently than that of factory-equipped vehicles. As with any vehicle, extreme care must be used to prevent loss of control or roll-over during sharp turns or abrupt maneuvers. Always wear seat belts, and drive safely, recognizing that reduced speeds and specialized driving techniques may be required. Failure to drive this vehicle safely may result in serious injury or death. Do not drive this vehicle unless you are familiar with its unique handling characteristics and are confident of your ability to maintain control under all driving conditions. Some modifications (and combinations of modifications) are not recommended and may not be permitted in your state. Consult your owner's manual, the instructions accompanying this product, and state laws before undertaking these modifications. You are responsible for the legality and safety of the vehicle you modify using these components.



LOGIQ™
AIR SUSPENSION SOLUTIONS

Installation Instructions
AIR SPRING KIT
88-23110 FORD F-250/F-350 (2011-16)

TOOLS REQUIRED
SAFETY GLASSES
9/16" WRENCH & DEEP SOCKET
11/16" DEEP SOCKET
3/4" WRENCH & DEEP SOCKET
3/8" ALLEN HEAD SOCKET
15MM DEEP SOCKET
17MM SOCKET
24MM DEEP SOCKET
C-CLAMP (X2)
3/8" & 1/2" DRIVE EXTENSIONS
12MM WRENCH (X2)
SOCKET DRIVER
JACK & JACK STANDS
TORQUE WRENCH
5/16" DRILL BIT & DRILL
AIR LINE CUTTER (RAZOR BLADE)

APPLICATION NOTES	
TRUCK COMPATIBILITY	
DOES NOT FIT F-450 MODELS DOES NOT FIT CAB CHASSIS MODELS NOT COMPATIBLE WITH MOST AFTERMARKET LEAF SPRINGS	
5TH WHEEL COMPATIBILITY	
OEM 5TH WHEEL	DEMCO DM8552000
BW GNRK1111	DEMCO DM8553000
BW RVK2401	REESE 30126
DRAW-TITE 4449	REESE 50026
CURT 16424	REESE 56016
DMECO DM8551000	

QTY	PARTS INCLUDED
1	DRIVER SIDE AIR SPRING ASSEMBLY
1	PASSENGER SIDE AIR SPRING ASSEMBLY
1	HARDWARE KIT
1	MANUAL INFLATION KIT
	HARDWARE KIT CONTENTS
3	1/2" - 13 X 1.75" HEX BOLT GRADE 8
1	1/2" - 13 X 2" CARRIAGE BOLT GRADE 8
4	1/2"-13 NYLON LOCKING NUT GRADE 8
7	1/2" FLAT WASHER
1	1/2" WIRE BOLT LEAD
1	RECTANGLE 1/2" CARRIAGE BOLT WASHER
8	3/8" - 16 X 4" CARRIAGE BOLT
8	3/8" - 16 X 1.375" HEX BOLT GRADE 8
8	3/8" - 16 NYLON LOCKING NUT GRADE 8
8	3/8" - 16 NYLON LOCKING NUT
24	3/8" FLAT WASHER
4	FRAME HOOKS
4	AIR SPRING LOWER STRAP
1	E-BRAKE CABLE GUARD W/ ZIP TIES
2	M10 - 16MM HEX BOLT
2	JOUNCE BUMPER SPACER
1	2ML RED THREADLOCKER PACKET
8	AXLE U-BOLT SPACER
2	7/16" - 14 x 3" SOCKET HEAD CAP SCREW
2	7/16" - 14 x 4" SOCKET HEAD CAP SCREW
2	7/16" - 14 HEX NUT
2	7/16" FLAT WASHER
2	7/16" SPLIT LOCK WASHER
	MANUAL INFLATION KIT CONTENTS
16	8" ZIP TIES
2	INFLATION VALVE TO 1/4" PTC FITTING
1	16' ROLL 1/4" AIR LINE

STEP 1 PREPARE TRUCK & KIT

Note original ride height measurement from center of rear fender arch to ground.

Safely lift truck and support with jack stands under axle. Remove the rear wheels.

NOTE: If your truck is equipped with rear height sensors, refer to the last page for height sensor relocation.

NOTE: The driver-side and passenger-side air spring assemblies are marked with D and P stickers on their respective lower brackets.

BEFORE INSTALLING THE KIT: Remove the air fitting plugs from both air spring assemblies. To remove, push the blue ring and plug in simultaneously, then keep pressure on the blue ring and carefully pull the plug out as shown.

TIP: Using a 1/4" open end wrench to hold the blue ring down can help with removal.

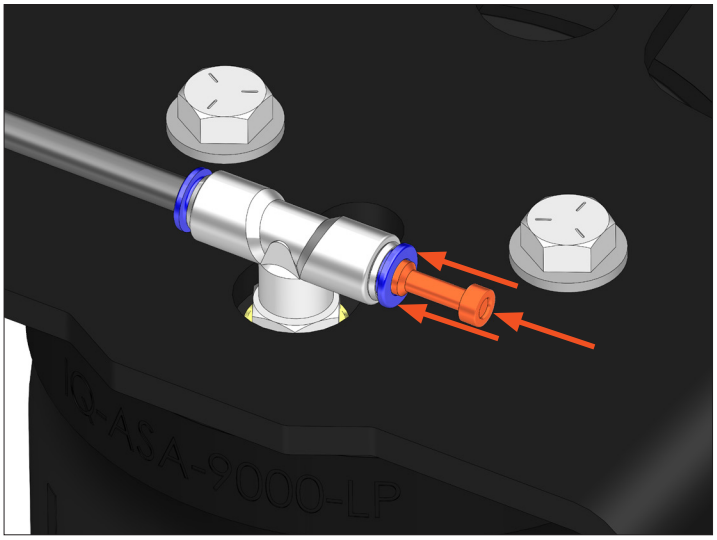

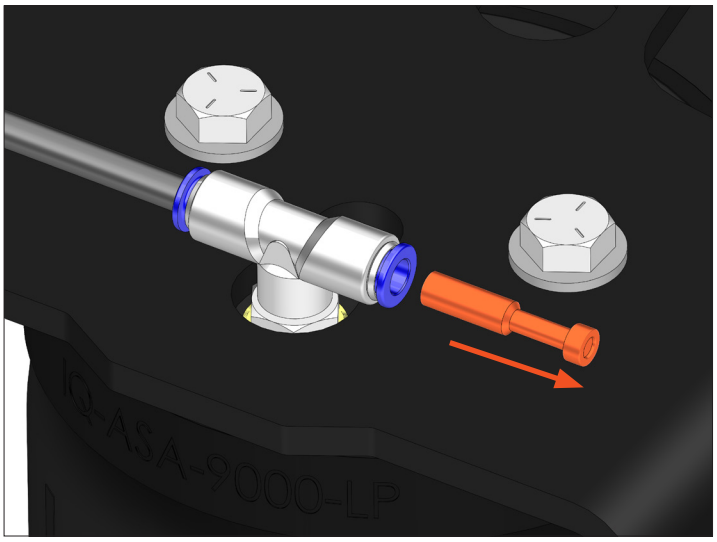

STEP 2 REMOVE OVERLOAD SPRINGS

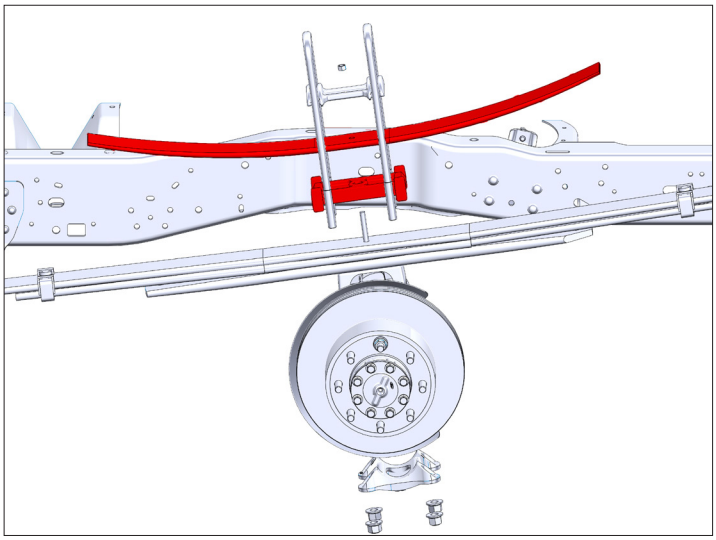

Spray factory center pin nuts and axle U-bolt nuts with penetrating oil.

One side at a time, remove center pin nut and factory axle U-bolts.

Remove overload spring and overload spacer block.

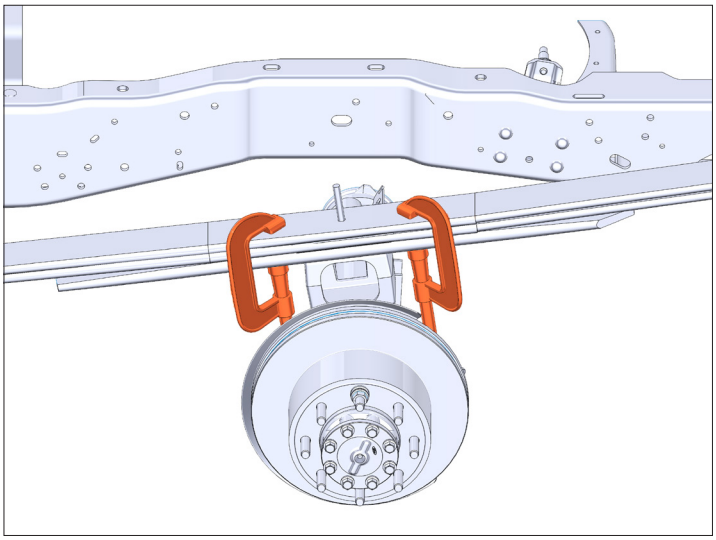

Clamp the leaves together with C-clamps front and rear.

Jack the frame of the vehicle up until you have about 6 inches of working space between the bottom of the leaf pack and the top of the axle pad.

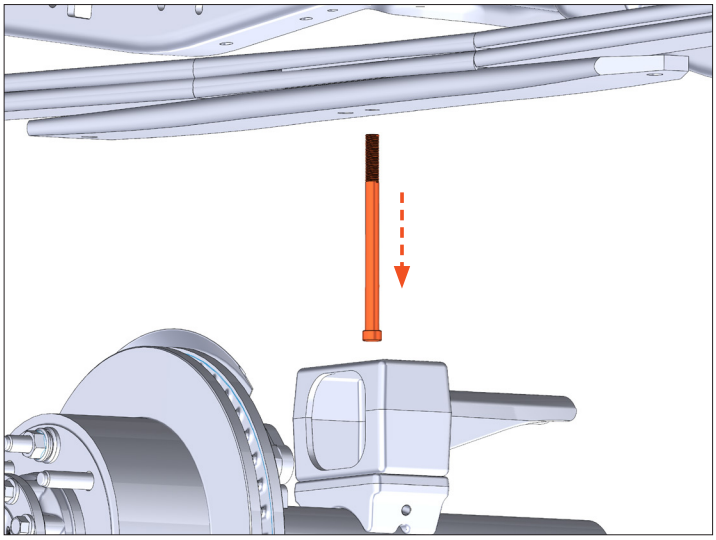

Remove the factory center pin from the leaf pack by driving it out from the top with a punch.

Install the new shorter leaf pack center pin that matches the length needed for your leaf pack (either 3" or 4").

Lower the frame so that the weight of the vehicle is sitting back on the axle.

Make sure that the head of the center pin is properly aligned with the hole in the axle pad.

STEP 3 REASSEMBLE LEAF SPRINGS

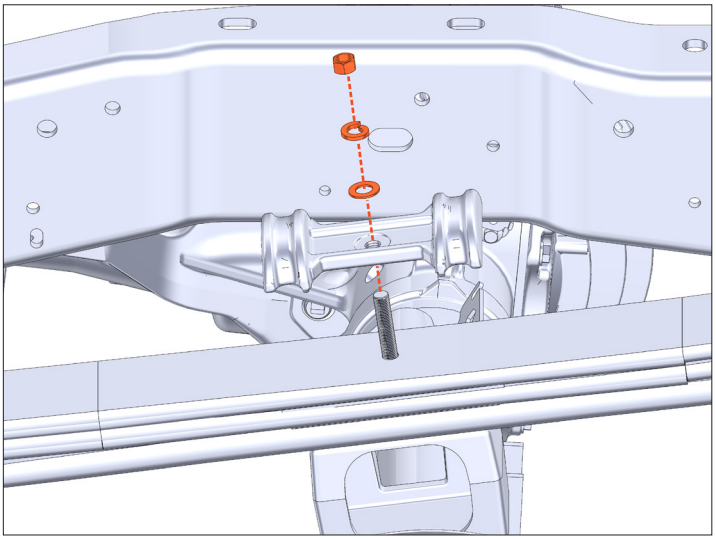

Reinstall the factory U-bolt saddle with the provided flat washer, split washer, and center pin nut.

Torque the center pin nut to **35 FT. LB.**

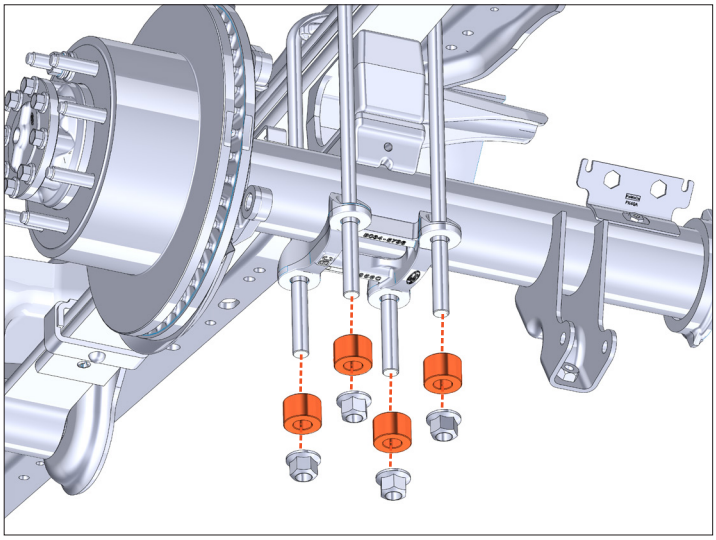

Reinstall factory U-bolts with the supplied **Axle U-bolt Spacers** between the axle cradle and the U-bolt nuts.

Torque the U-bolt nuts in a cross pattern in 4 stages to the specifications shown in **TABLE 1.**

TABLE 1	
SRW VEHICLES	
STAGE 1	48 FT. LB. (65 NM)
STAGE 2	96 FT. LB. (130 NM)
STAGE 3	148 FT. LB. (200 NM)
STAGE 4	195 FT. LB. (265 NM)
DRW VEHICLES	
STAGE 1	74 FT. LB. (100 NM)
STAGE 2	148 FT. LB. (200 NM)
STAGE 3	221 FT. LB. (300 NM)
STAGE 4	295 FT. LB. (400 NM)

STEP 4 INSTALL BUMPSTOP SPACER & PREP FOR ASSEMBLY MOUNTING

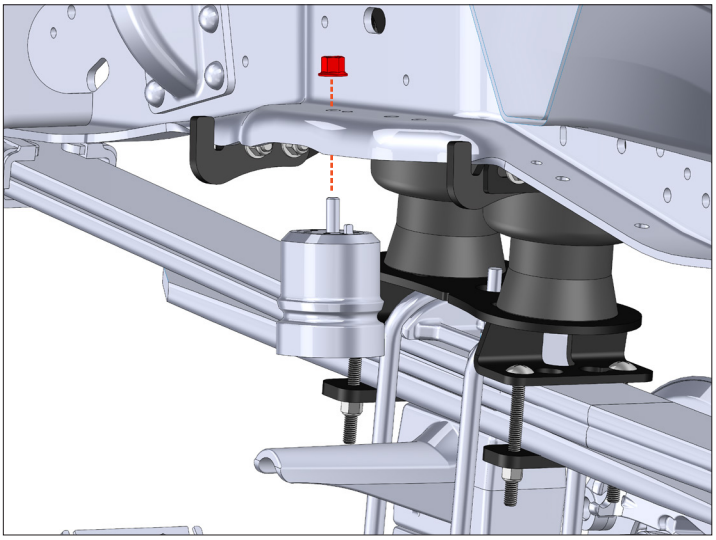

Unbolt factory bumpstop using a 15mm socket.

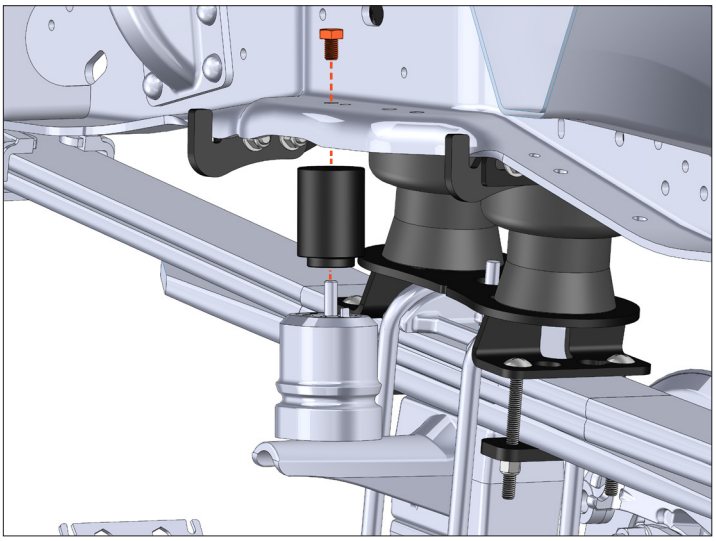

Reinstall factory bumpstop with provided alumimum spacer and longer M10 bolt.

Apply some of the provided thread locker to the bolt before installing.

Torque the M10 bolt to **15 FT. LB**.

Repeat for passenger side.

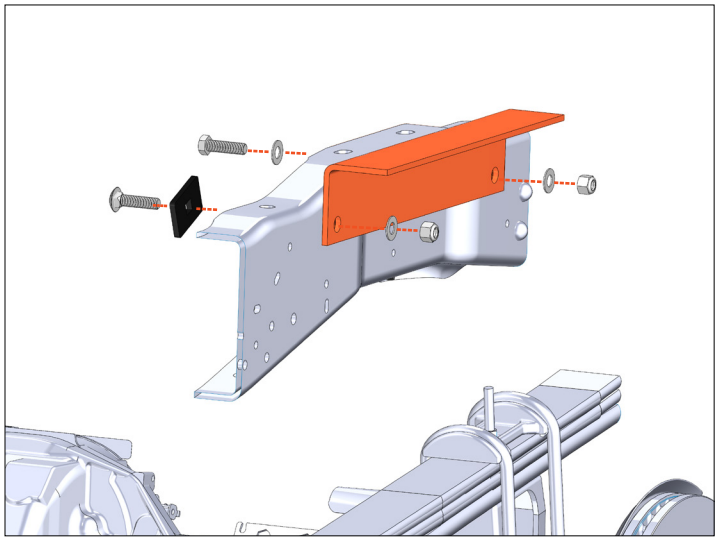

NOTE: If equipped with a fifth wheel hitch, first remove the frame mounting hardware.

On the driver side, bend the E-brake bracket on the U-bolt saddle downward to make room for the lower bracket.

STEP 6 DRIVER SIDE AIR SPRING ASSEMBLY

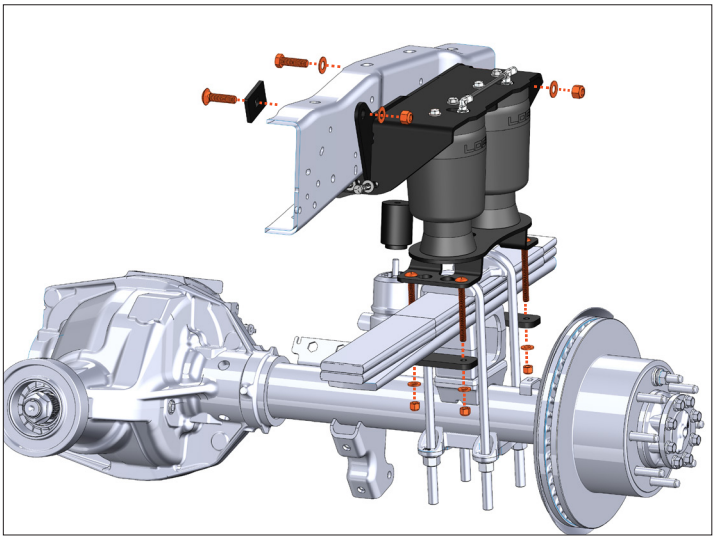

Use the supplied 1/2" carriage bolt with rectangle washer and bolt lead wire and one of the 1/2" bolts to attach the upper bracket to the outside of the frame, or hitch, through the factory mounting holes.

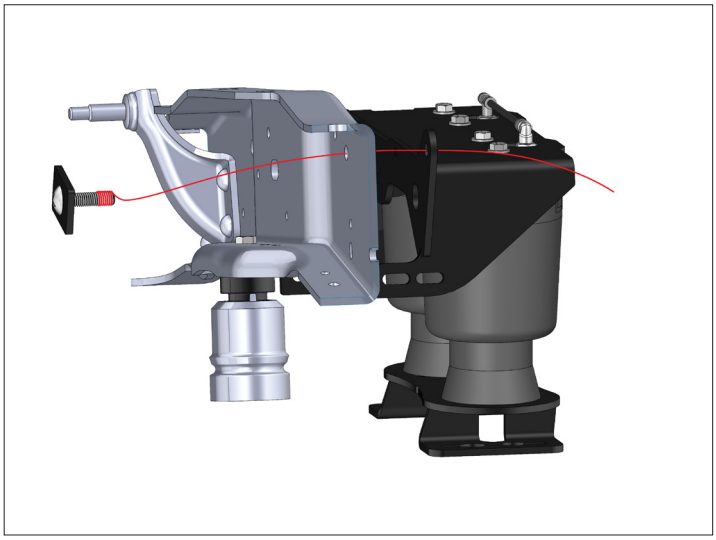

Feed the carriage bolt through the factory frame mounting hole above the DEF or fuel tank (hole towards the front of the truck). Secure the carriage bolt and hex bolt with the provided 1/2" washers and nuts.

Ensure the hex bolt is oriented with the bolt head on the inside of the frame. Snug both nuts.

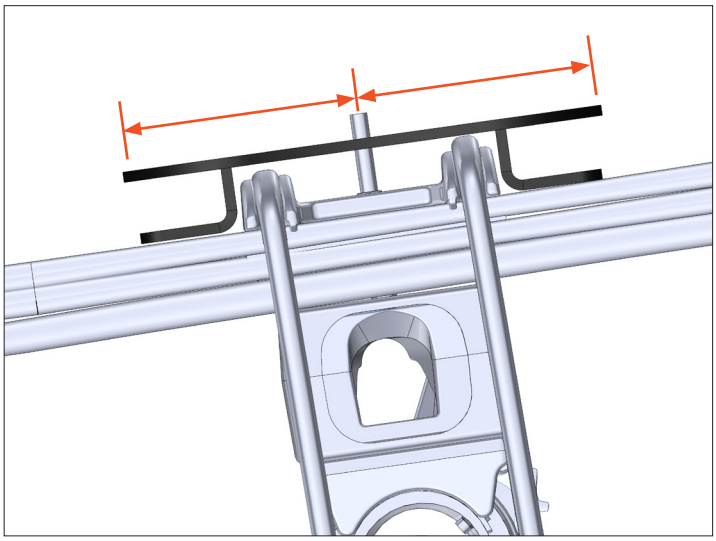

Use the supplied 3/8" hardware and leaf spring straps to attach the lower air spring bracket to the leaf spring.

Make sure the bracket is centered over the U-bolt saddle and snug the nuts.

Install the provided sheathing around the e-brake cable where it contacts the lower bracket.

STEP 7 PASSENGER SIDE AIR SPRING ASSEMBLY

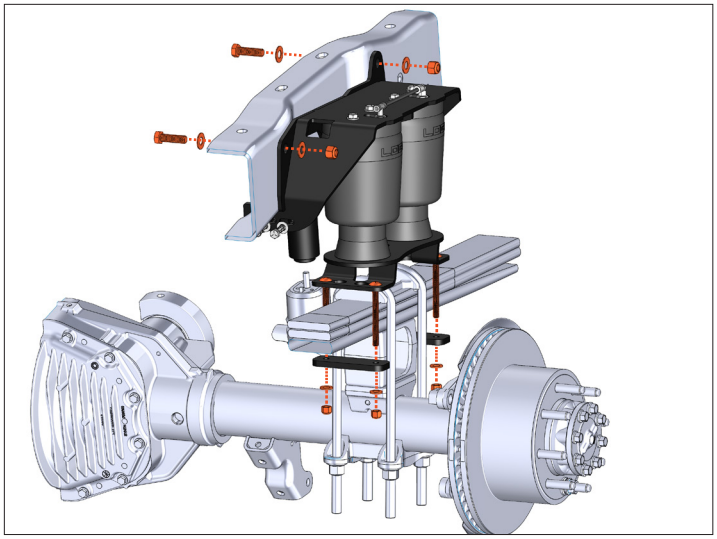

Use the other two supplied 1/2" bolts with washers and nuts to attach the upper bracket to the outside of the frame, or hitch, through the factory mounting holes. Snug the nuts.

Use the supplied 3/8" hardware and leaf spring straps to attach the lower air spring bracket to the leaf spring.

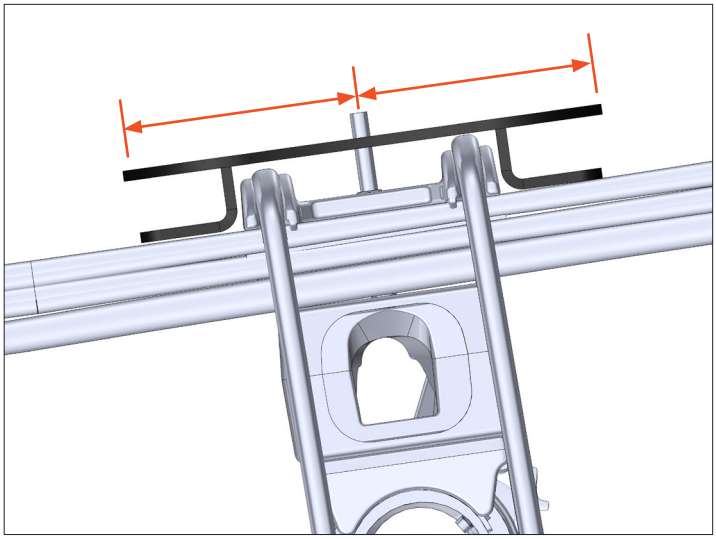

Make sure the bracket is centered over the U-bolt saddle and snug the nuts.

STEP 8 FRAME HOOKS

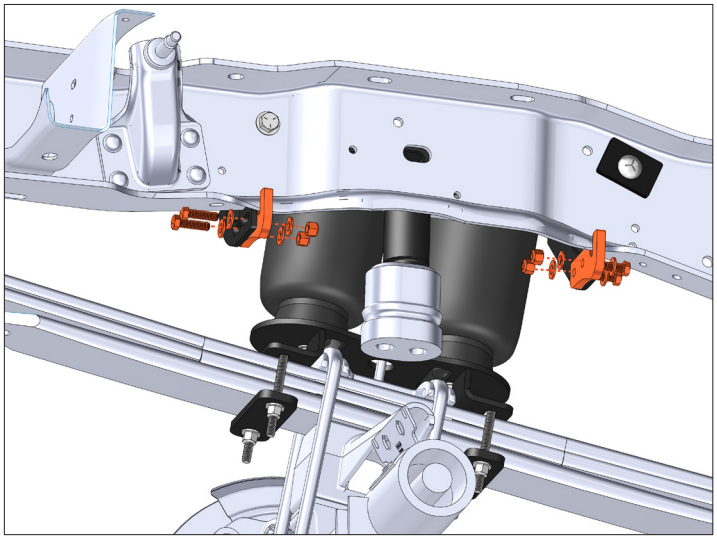

Attach the supplied frame hooks to each upper bracket with the Grade 8 3/8" hardware.

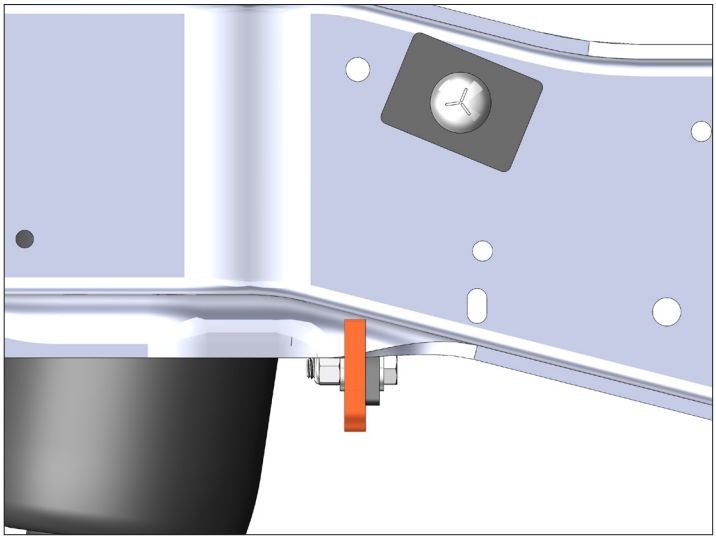

Ensure the hooks are mounted in the correct orientation as shown (inside of the upper bracket arms).

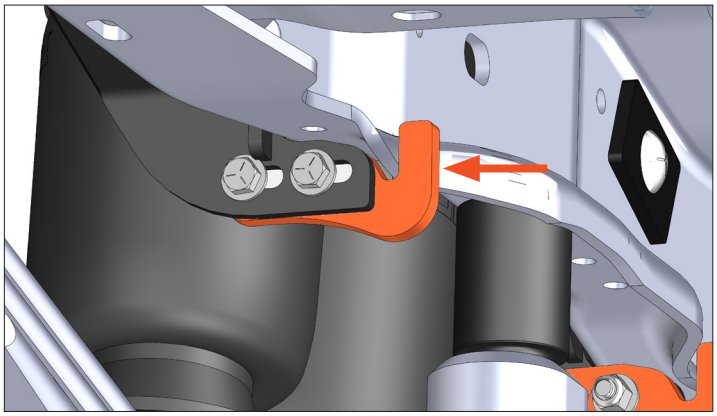

Verify that the hooks are pushed up against the frame rail and there is engagement with the frame.

STEP 9 TORQUE HARDWARE

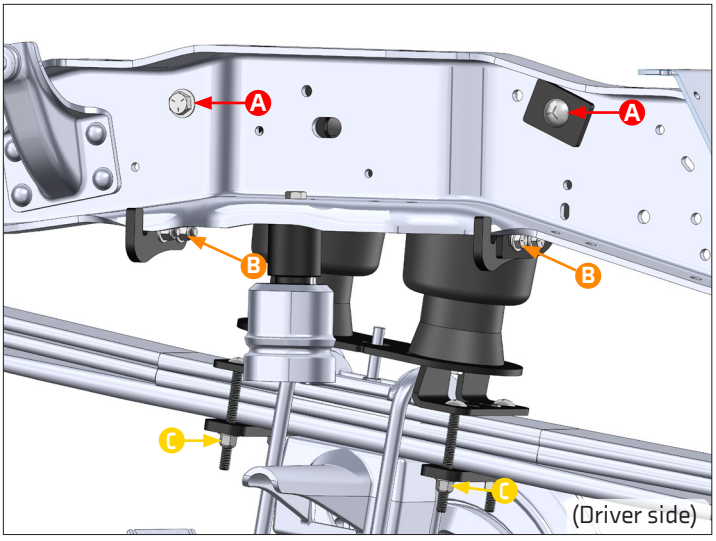

(Driver side)

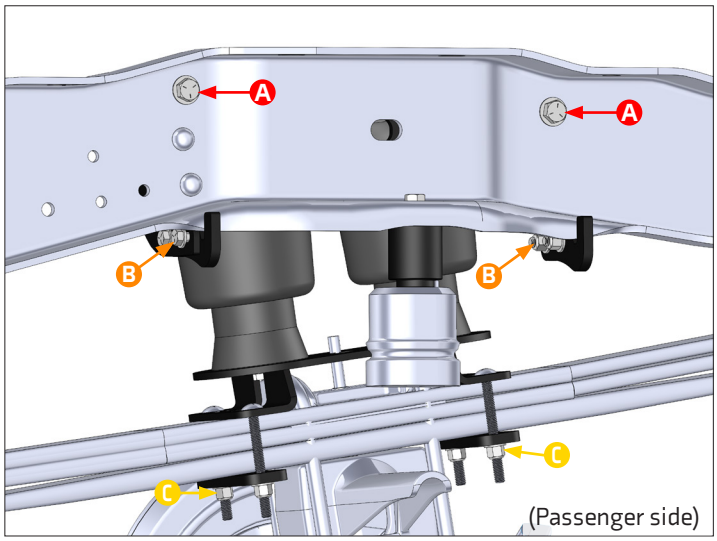

(Passenger side)

A Torque the 1/2" hardware to **100 FT. LB.**

B Torque the frame hook 3/8" hardware to **44 FT. LB.**

C Torque the lower bracket 3/8" hardware to **20 FT. LB.**

STEP 10 AIR LINE ROUTING

When used with an on-board air management system, refer to the on-board air management system installation instructions before routing the air lines.

When not using an on-board air management system, mount inflation valves at desired location using 5/16" drill bit.

Route air line from each inflation valve to each air fitting tee on both of the air spring assemblies. **Avoid hot exhaust and sharp edges. Cut air line square and free from burrs with air line cutter or razor blade!**

STEP 11 FINAL SAFETY CHECKS

Check for leaks at fittings with soapy water.

Check tire clearance to air springs (more than 1")

Verify all fasters are torqued properly.

Verify at least 5psi in air springs before driving.

⚠ WARNING & DISCLAIMERS CONTINUED

Safety Warnings

MISUSE OF THIS PRODUCT COULD LEAD TO INJURY OR DEATH.

Suspension systems or components that enhance the on and off-road performance of your vehicle may cause it to handle differently than it did from the factory. Extreme care must be used to prevent loss of control during abrupt maneuvers.

Always operate your vehicle at reduced speeds to ensure your ability to control your vehicle under all driving conditions. Failure to drive safely may result in serious injury or death.

Driver and passengers must **ALWAYS** wear seat belts, avoid quick sharp turns and other sudden maneuvers. LOGIQ™ does not recommend the combined use of suspension lifts, body lifts, or other lifting devices.

You should never operate your vehicle under the influence of alcohol or drugs.

Constant maintenance is required to keep your vehicle safe. Thoroughly inspect your vehicle before and after every off-road use.

It is the responsibility of the retailer and/or the installer to review all state and local laws, with the end user of this product, related to bumper height laws and the lifting of their vehicle before the purchase and installation of any LOGIQ™ products.

Raised vehicles have altered viewing angles than stock vehicles. This can lead to larger or different blind spots than the driver is accustomed. It is the responsibility of the driver to be aware of this and check their surroundings at all times while the vehicle is in motion and immediately prior to operating vehicle. Failure to do so can lead to damages, injury, or death.

Installation Warning

All steps and procedures described in these instructions were performed while the vehicle was properly supported on a two post vehicle lift with safety jacks.

Use caution during all disassembly and assembly steps to ensure suspension components are not over extended causing damage to any vehicle components and parts included in this kit.

Included instructions are guidelines only for recommended procedures and are not meant to be definitive. Installer is responsible to insure a safe and controllable vehicle after performing modifications.

LOGIQ™ recommends the use of an OE Service Manual for model/year of vehicle when disassembly and assembly of factory and related components.

Unless otherwise specified, tighten all bolts and fasteners to standard torque specifications listed within the OE Service Manual.

Suspension components that use rubber or urethane bushings should be tightened with the vehicle at normal ride height. This will prevent premature wear or failure of the bushing and maintain ride comfort.

Larger tire and wheel combinations may increase leverage on suspension, steering, and related components.

Due to payload options and initial ride height variances, the amount of lift/lower is a base figure. Final ride height dimensions may vary in accordance to original vehicle ride height. Always measure the vehicle ride height prior to beginning installation.

⚠ WARNING & DISCLAIMERS

SAEJ2492 Warning

By installing this product, you acknowledge that the suspension of this vehicle has been modified. As a result, this vehicle may handle differently than that of factory-equipped vehicles. As with any vehicle, extreme care must be used to prevent loss of control or roll-over during sharp turns or abrupt maneuvers. Always wear seat belts, and drive safely, recognizing that reduced speeds and specialized driving techniques may be required. Failure to drive this vehicle safely may result in serious injury or death. Do not drive this vehicle unless you are familiar with its unique handling characteristics and are confident of your ability to maintain control under all driving conditions. Some modifications (and combinations of modifications) are not recommended and may not be permitted in your state. Consult your owner's manual, the instructions accompanying this product, and state laws before undertaking these modifications. You are responsible for the legality and safety of the vehicle you modify using these components.

Headlamp Warning

A lifted or lowered vehicle may have different headlight aim performance. LOGIQ™ recommends marking and recording the headlight beam position before kit installation and then adjusting, if necessary, the headlamps to the same height settings after kit installation. Set the vehicle on a level surface 10' to 15' from a solid wall or garage door. (This is a general distance with some manufacturers requiring different distances.) Note the top height of the low beam's bright spot, the top of the most intense part of the beam, for driver and passenger side. Height may vary from side to side. Repeat this procedure and adjust after lift kit is installed. Adjust if the aim is off by turning the adjusters gradually (a quarter of a turn) and looking to see where the new alignment falls. It may be easier to block one headlamp while adjusting the other. Consult the owner operation manual for procedures to adjust headlights - many automakers offer headlight aiming specs. Some states have their own specifications when it comes to headlight aim, so it's best to follow those rules when aligning headlights.

FAILURE TO PERFORM THE POST INSPECTION CHECKS MAY RESULT IN VEHICLE COMPONENT DAMAGE AND/OR PERSONAL INJURY OR DEATH TO THE DRIVER AND/OR OTHERS.

Final Checks & Adjustments

Once the vehicle is lowered to the ground, check all parts which have rubber or urethane components to ensure proper torque. Torque lug nuts to the wheel manufacturer specs. Move vehicle backwards and forwards a short distance to allow suspension components to adjust. Turn the front wheels completely left then right and verify adequate tire, wheel, brake line, and ABS wire clearance. Test and inspect steering, brake and suspension components for tightness and proper operation. Inspect brakes hoses and ABS lines for adequate slack at full extension, adjust as necessary.

RECHECK ALL HARDWARE FOR PROPER TORQUE VALUES AFTER 500 MILES, AND THEN PERIODICALLY AT EACH SERVICE INTERVAL THEREAFTER.

Vehicle Handling Warning

Increasing the height of your vehicle raises the center of gravity and can affect stability and control. Use caution on turns and when making steering corrections.

Vehicles with larger tires and wheels will handle differently than stock vehicles. Take time to familiarize yourself with the handling of your vehicle.

Wheel Alignment/Headlamp Adjustment

It is necessary to have a proper and professional wheel alignment performed by a certified alignment technician. Align the vehicle to factory specifications. It is recommended that your vehicle alignment be checked after any off-road driving.

In addition to your vehicle alignment, for your safety and others, it is necessary to check and adjust your vehicle headlamps for proper aim and alignment. If the vehicle is equipped with active or passive safety/collision monitoring and/or avoidance systems including, but not limited to, camera- or radar-based systems, check and adjust your vehicle's systems for proper aim and function.